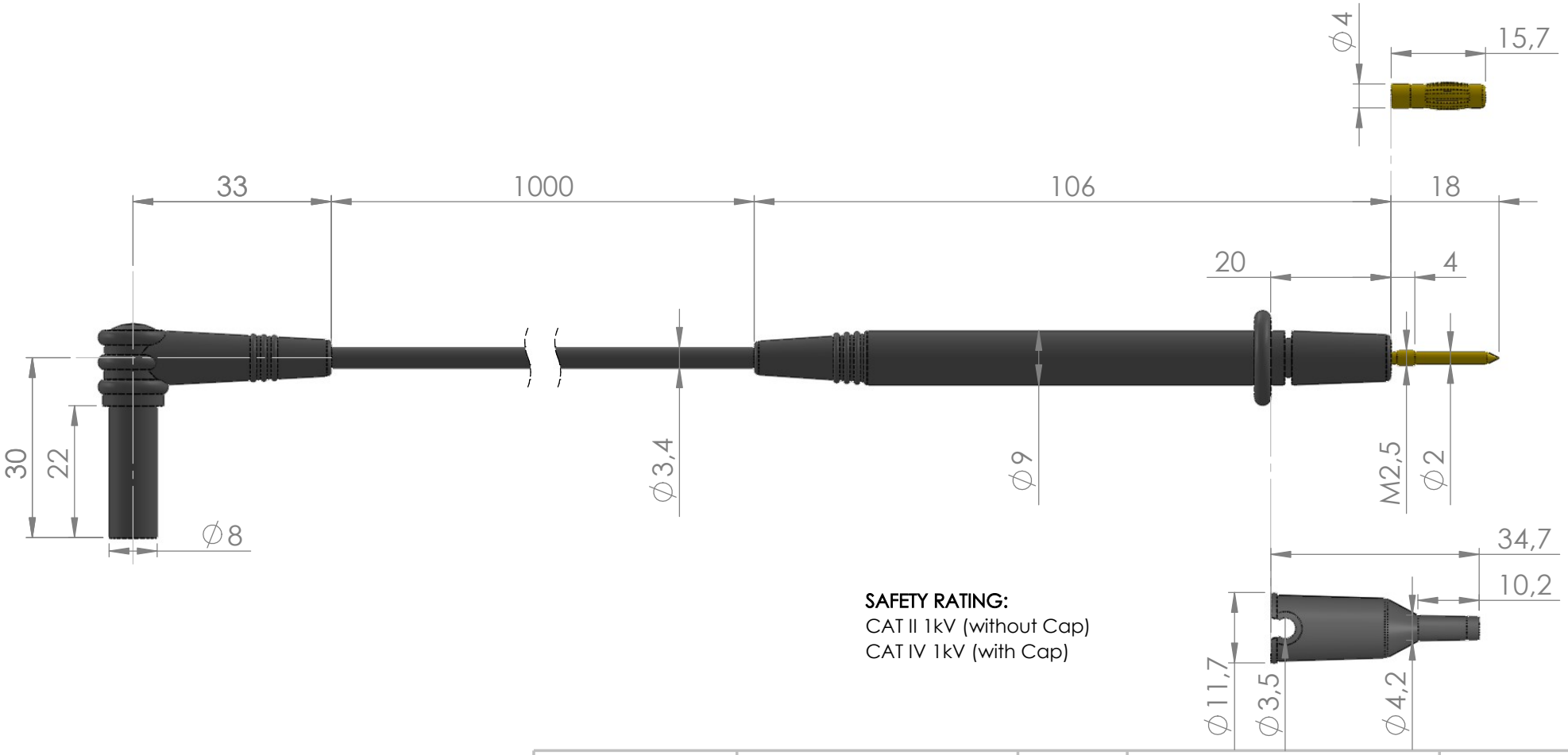

SAFETY RATING:
CAT II 1kV (without Cap)
CAT IV 1kV (with Cap)

ALL DIMENSIONS IN MM

REV 1.0

	NAME	SIGNATURE	DATE
DRAWN	mw		03/2018
CHECKED			
APPROVED			
PRODUCTION			
QA			

MATERIAL:

WEIGHT:

TITLE:

Brymen BL21S2-T4SC

Silicone Test Leads with Screw-On Banana Plugs

DRAWING NO.:

A4

SCALE: 1:1

PAGE 1 OF 1